U.S. RTE. NO.	STATE RTE. NO.	FEDERAL PROJECT NO.	FISCAL YEAR	SHEET NO.	TOTAL SHEETS
	CALIF.				

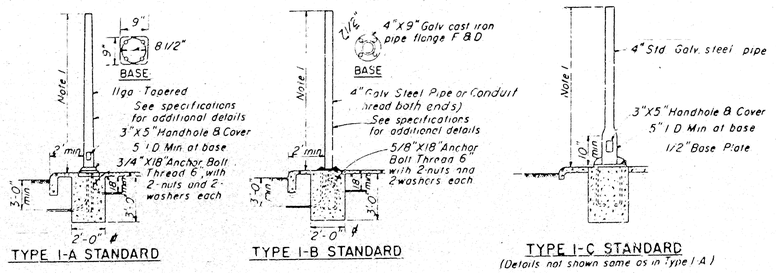

TYPE I-A STANDARD

TYPE I-B STANDARD

TYPE I-C STANDARD
(Details not shown same as in Type I-A)

Notes
1. Standards shall be 10'-0" minimum for vehicular signals 7'-0" for pedestrian signals and left-turn vehicular signals.
2. See plans for type of signal mounting.
3. Top of standard shall be 4 1/2" O.D.
4. Conduits shall extend 2" max. above finished surface of foundation and for Types I-A & I-C Standards shall be sloped towards handhole.
5. One Anchor Bolt shall be bonded to conduit.

SIGNAL STANDARDS
NO SCALE

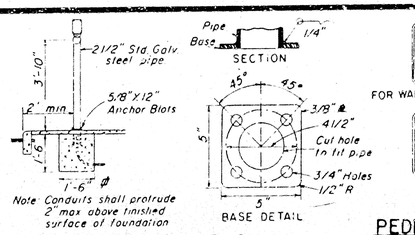

PEDESTRIAN PUSH BUTTON POST
NO SCALE

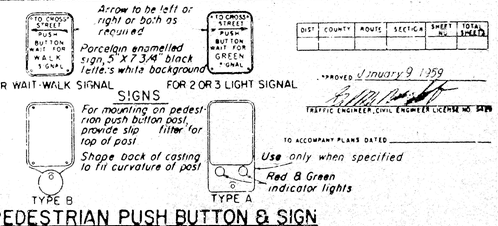

DIST.	COUNTY	ROUTE	SECTION	SHEET NO.	TOTAL SHEETS

APPROVED January 9, 1959
TRAFFIC ENGINEER, CIVIL ENGINEER LICENSE NO. 5439
TO ACCOMPANY PLANS DATED _____

PEDESTRIAN PUSH BUTTON & SIGN
NO SCALE

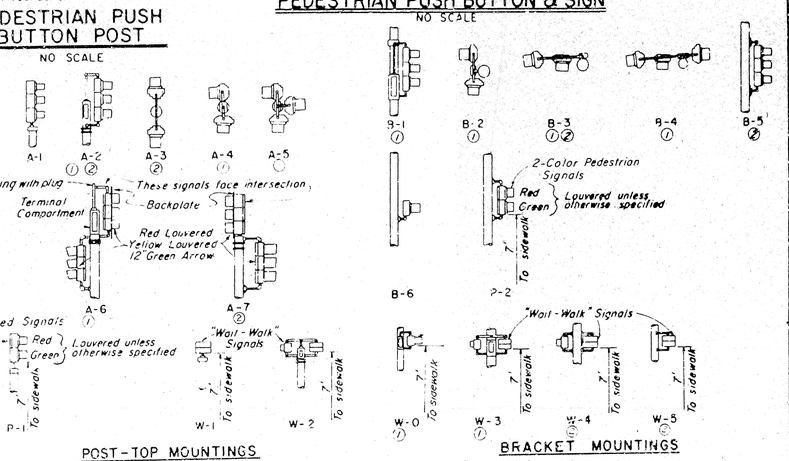

Notes (1) Mounting includes terminal compartment (shown for illustrative purposes only, actual location on side of Standard away from traffic)
(2) Special mountings to be used only when indicated on plans

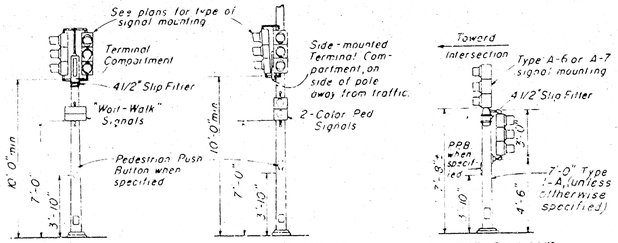

ON TYPE I-A, I-B OR I-C STANDARDS

ON TYPE II, III OR X STANDARDS

LEFT TURN LANE SIGNALS

TYPICAL EQUIPMENT MOUNTINGS
NO SCALE

VEHICULAR AND PEDESTRIAN SIGNAL MOUNTINGS
NO SCALE

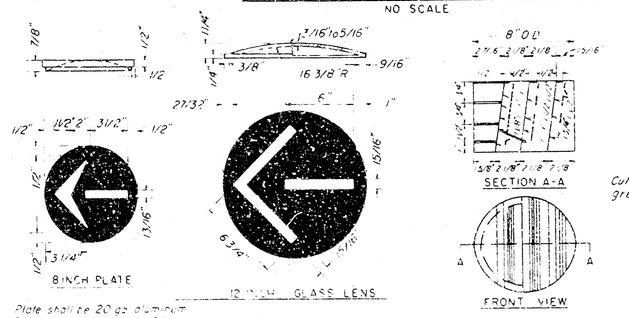

Plate shall be 20 ga. aluminum finished with two coats of flat black enamel

Note: Louvers and lens plates shall be secured in place with one plated brass machine screw and nut and oriented as directed by Engineer

DIRECTIONAL LOUVER

SIGNAL HEAD ACCESSORIES
NO SCALE

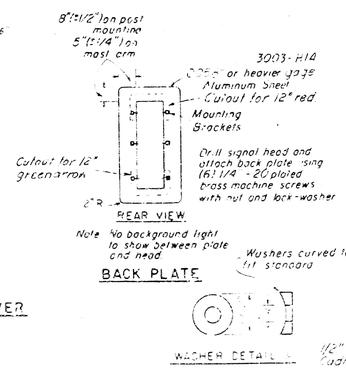

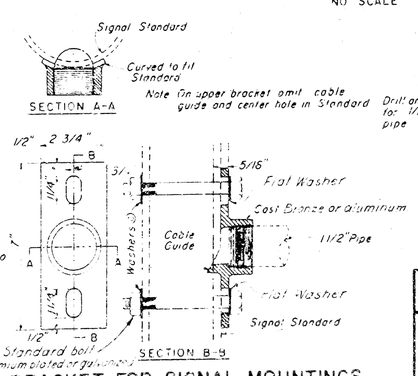

BRACKET FOR SIGNAL MOUNTINGS
NO SCALE

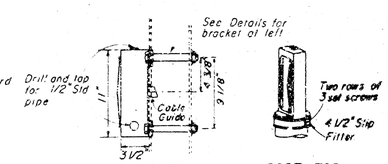

TERMINAL COMPARTMENTS
NO SCALE

STATE OF CALIFORNIA
DEPARTMENT OF PUBLIC WORKS
DIVISION OF HIGHWAYS

STANDARD DETAILS NO. 2
TRAFFIC SIGNAL AND HIGHWAY LIGHTING INSTALLATIONS

SCALE AS NOTED | REV. DATE | DRAWING NO. E

ES-2

SHEET 13 OF 13 SHEETS